SCORPIO 23'

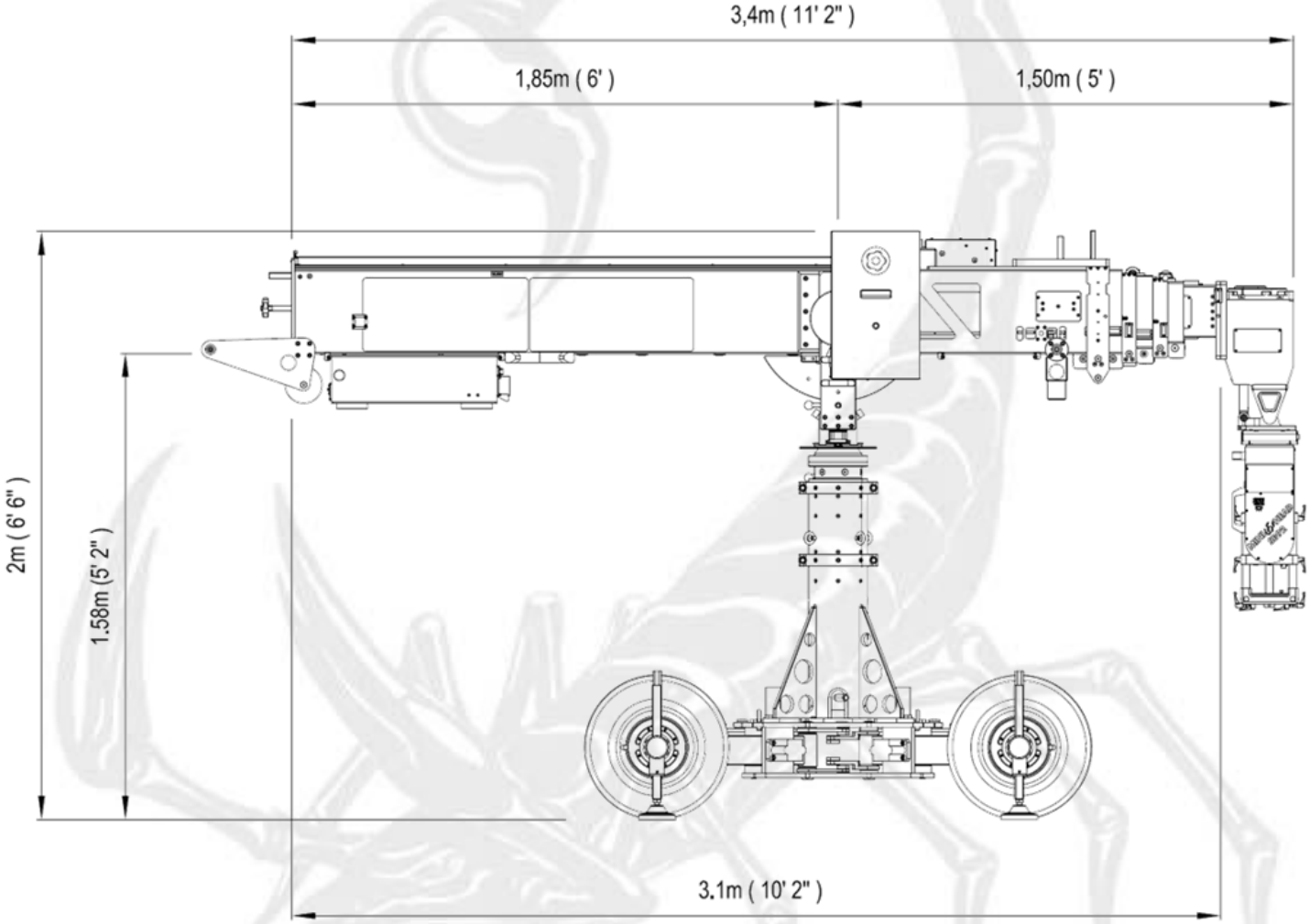

SERVICEVISION BIS S.L.
Calle Ríos Rosas, 20
08940 Cornellà de Llobregat
Barcelona, Spain
Phone +34 93 2238630
Fax +34 93 2238631
comercial@servicevision.es
WWW.SERVICEVISION.ES

SERVICEVISION USA
12035 Shermann Way
North Hollywood
CA 91605 USA
Phone +1 (818) 623 1970
Fax +1 (818) 623 1975
rental@servicevisionusa.com
WWW.SERVICEVISIONUSA.COM